Quick Start Guide

Barrier Arm Gate Operator

See operator manual for complete installation instructions and warnings.

For online troubleshooting and product information scan QR code, or follow the link: https://support.partner.liftmaster.com/s/gate-operators-barrier-gates/techna

WARNING

To prevent possible SERIOUS INJURY or DEATH, disconnect electric power to operator BEFORE installing. ALL electrical connections MUST be made by a qualified individual.

Step 1A:

Confirm Handing and Change Spring Count

Determine Left or Right Handing and change spring direction as required. Change spring count based on arm length. See Installation Manual or label on operator front cover.

Note: Not having the correct spring count reduces the life of the operator and the springs.

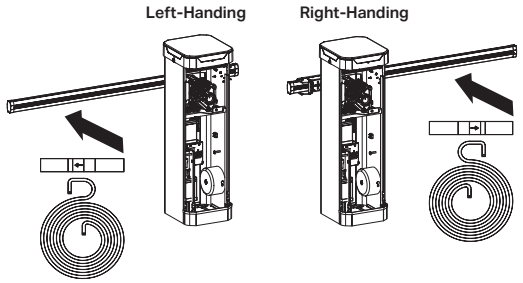

****Select the correct number of springs based on arm length****

8 ft: 3 springs	9 ft: 4 springs	10 ft: 5 springs	11 ft: 6 springs
12 ft: 7 springs	13 ft: 8 springs	14 ft: 9 springs	

Note: If adding accessories to arm please see spring chart in manual.

Tools (see manual for required torque values)**:**

7/32" Hex Socket: Counterbalance/End Plate
3/16" Allen Key: Key Set Screws
5/64" Allen Key: Retention Collar Screws

Step 1B:

Install Arm

To start, be sure the barrier arm is in the vertical position. Check spring tension. There should be zero tension on the springs.

Note: If under tension, see manual "Removing Spring Tension."

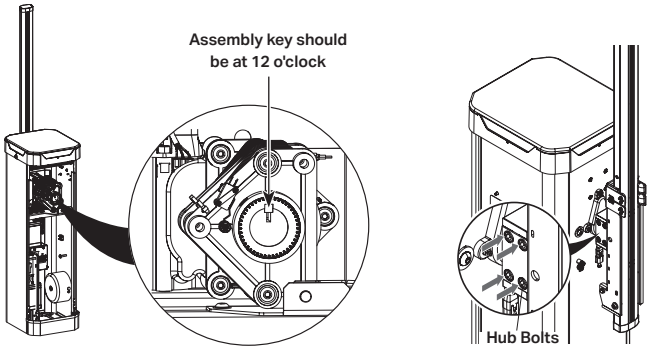

Tools:

Hub Bolts: 5/16" Hex Socket; 60 ft-lb torque

Step 1C:

Install Arm Sensor

All barrier arm setups require the use of a sensor (pre-installed in bracket) and mating magnet (requires installation into appropriate location on arm) to detect the presence of the arm within the bracket.

Note: The operator will not allow movement without this check.

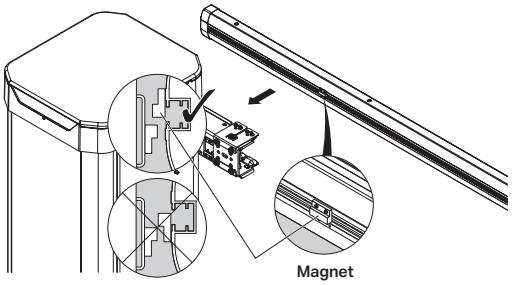

Step 1D:

Wire Arm Routing

See image below for appropriate arm harness cable routing and hold down. Proper routing is critical to prevent premature wear and tear to cable harness.

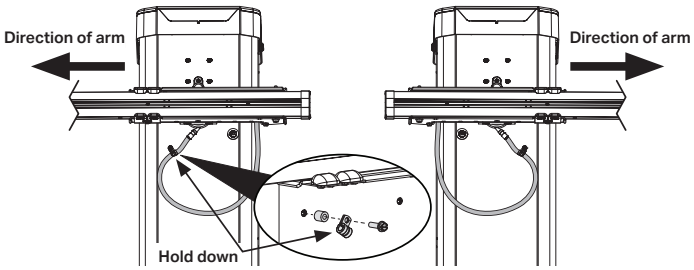

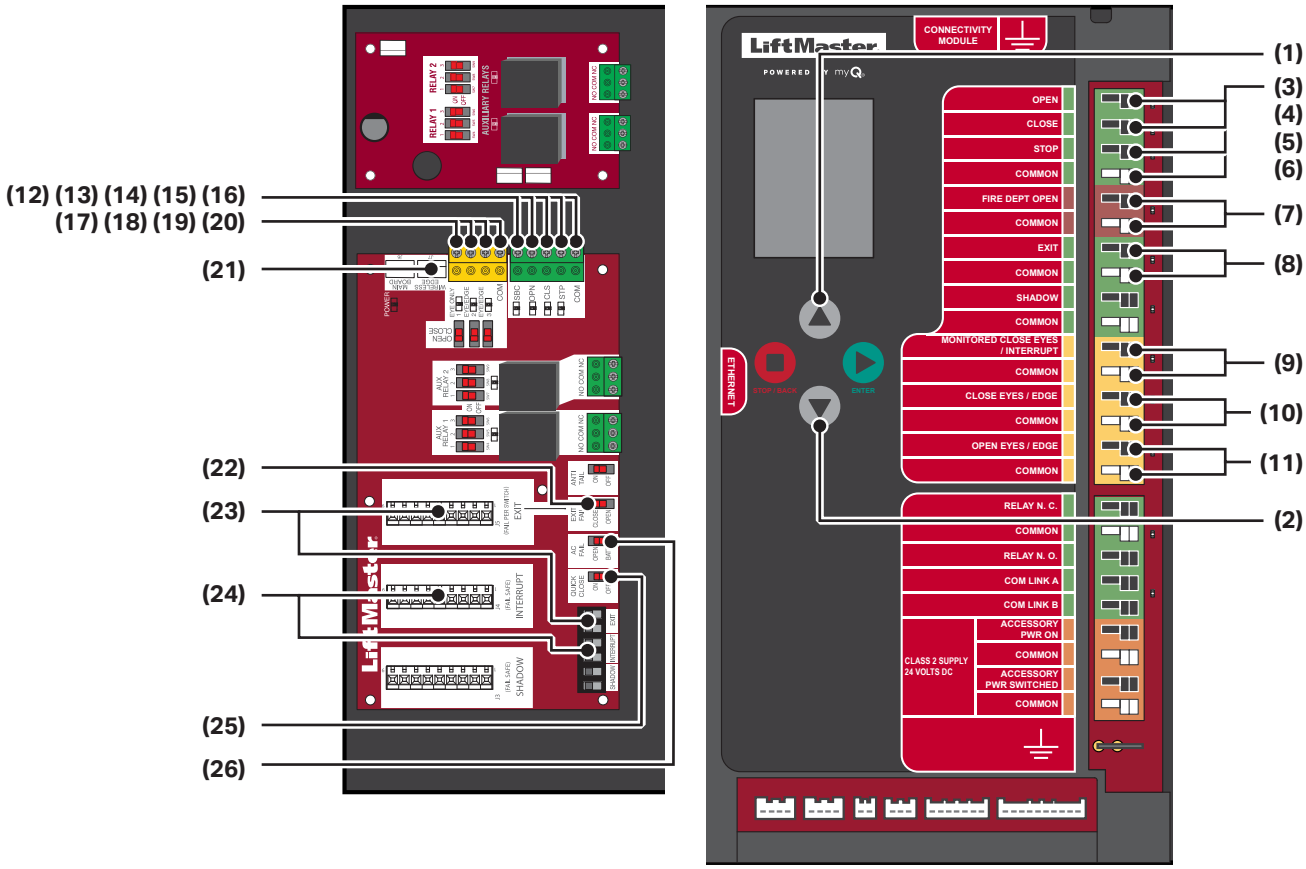

Step 2:

Connect Inputs and Accessories

Key	Type	Input	Action / Recommendation
		Determine Method to Open Gate	
1	Wired	On-Board Open	Hard Inputs* / Line of Sight User Controlled
3 & 6	Wired	3-Button Station Open	Hard Inputs* / Line of Sight User Controlled
7	Wired	Fire Dept Open	Hard Inputs* / Fire Lock
8	Loops	Exit Loop Main Board (Short to Common)	3rd Party Loop Detector
23	Loops	Exit Loop Exp Board (LOOPDETLM)	LiftMaster Loop Detector
13 &16	Wired	Exp Board Open	Access Control Devices
12 & 16	Wired	Exp Board Single-Button-Control (SBC)	
	Wireless	Learned Transmitter	
	Wireless	CAPX Access Device	
	Wireless	Remote Open From myQ Business (WiFi®, Ethernet, Gateway)	
		Confirm Settings for Power and Loop Errors	
26	Power Loss	AC Fail Set to "Open"	Opens and holds open when AC loss for more than 15 secs
Menu	Power Loss	Battery Fail Set to "Open"	Opens and holds open when AC loss and Battery level has 0 bars. (AC Fail Set to "Battery")
22	Exit Loop Error	EXIT Fail set to "Open"	Monitored Exit Loop from expansion board experienced an error
		Determine Method to Close Gate	
2	Wired	On-Board Close	Hard Inputs* / Line of Sight User Controlled
4 & 6	Wired	3-Button Station Close	Hard Inputs* / Line of Sight User Controlled
9 & 25	Loops	Monitored Close Eyes/Interrupt on Main Board (Short to Common) + Quick Close ON	3rd Party Loop Detector
24 & 25	Loops	Interrupt Loop Exp Board (Loop Detector) + Quick Close ON	LiftMaster Loop Detector
14 & 16	Wired	Exp Board Close	
12 & 16	Wired	Exp Board Single-Button-Control (SBC)	
	Wireless	Learned Transmitter	
	Wireless	Remote Close from myQ Business (Wi-Fi, Ethernet, Gateway)	
Menu	Automated	Timer to Close	Set to 4-995 secs

*Hard Inputs (Maintained Input for more than 5 seconds will override safeties)

Ways to Hold Open/Close		
Open, Remove Stop Jumper	Close, Remove Stop Jumper	CAPX Hold Open

Step 3:

Connect Eyes / Edge Devices

The use of LiftMaster Monitored devices is recommended.

Key	Input	Monitored Eye	Non-Monitored Eye	Wireless Edge
9	Monitored Close Eyes / Interrupt and Common	Y	N	N
10	Close Eyes / Close Edge and Common	Y	Y	N
11	Open Eyes / Edge and Common	Y	Y	N
17 & 20	Eye Only and Common	Y	Y	N
18 & 20	Eye / Edge and Common	Y	Y	N
19 & 20	Eye / Edge and Common	Y	Y	N
21	Wireless Edge	N	N	Y

Common Gate Control Scenarios

Scenario 1:

User Controlled 3 Button Station

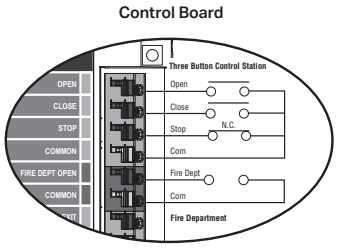

Scenario 2:

Automated Close by Timer

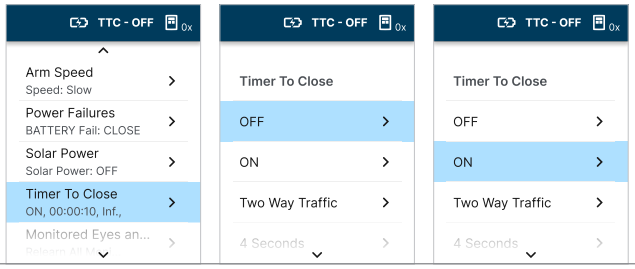

Scenario 3:

Automated Open by Vehicle Detection (Exit Loop)

Scenario 4:

Automated Close by Vehicle Detection (Quick Close)

Step 1: Interrupt Loop goes into Exp board Interrupt Loop
OR
Main Board 'Monitored Close Eyes / Interrupt' terminal

Step 2: Set 'Quick Close' Switch to ON

Note: To prevent tail gating, turn 'Anti-Tail' Switch to ON.

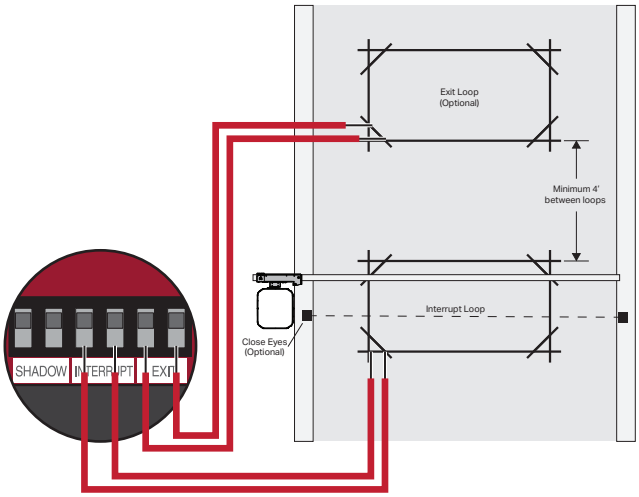

Common Gate Control Scenarios

Scenario 5:

Automated Open By Access System

Access system to 'Exp Open'
OR
Main Board 'Exit' Input

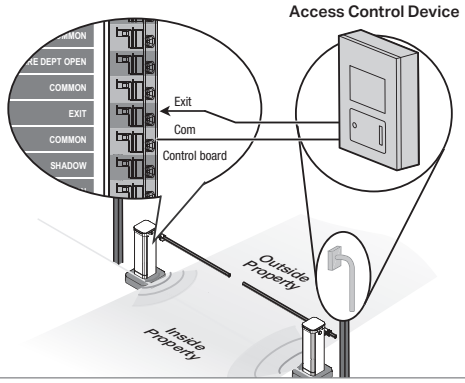

Scenario 6:

SAMS (Sequence Access Management System)

SAMS only allows the barrier gate to open if the swing / slide gate is open. If the swing/slide gate is closed, the barrier gate will open the swing/slide gate. Menu > Operator Pairing > Mode > Relays and Sync Option > SAMS. Pulse only or SAMS Pulse and Hold.

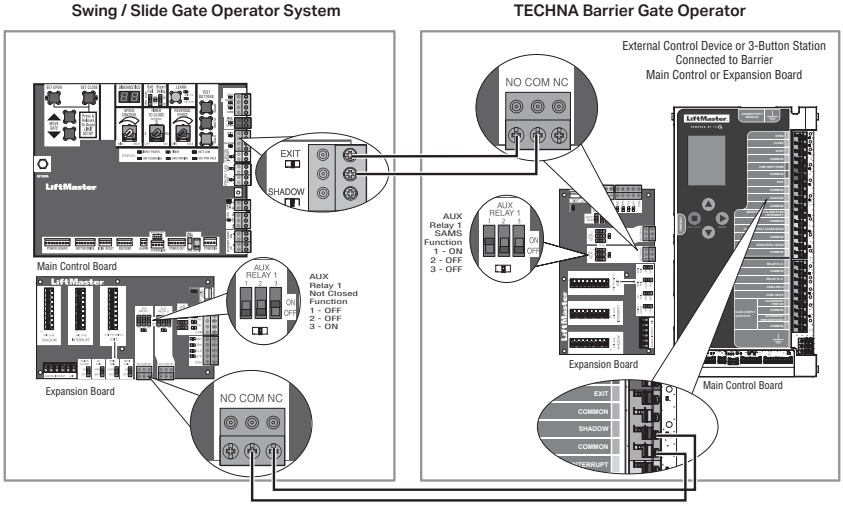

Scenario 7:

Tandem

Tandem Operator Sync Mode will synchronize both paired operators to open and close together. Tandem Operator Sync Mode requires two operators of the same model to be connected via COM Link (preferred) or Wireless and then paired using the display menu.
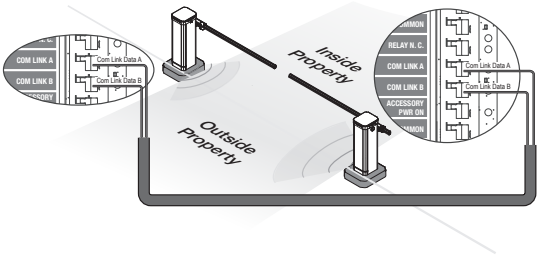
To turn on Tandem Sync Mode after Operator Pairing is complete, on the display menu, navigate to "Operator Pairing > Sync Options > TANDEM Configuration > Enter"